ENGLISH: Original instructions

INSTRUCTION MANUAL

Cordless Steel Rod Cutter

DSC251

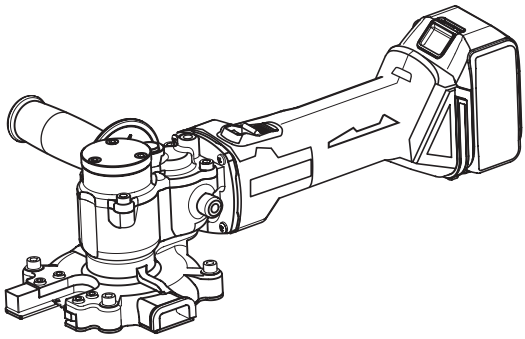

Read before use.

Before installing and operating this machine, read, understand and follow all instructions and operating procedures. Keep this Instruction Manual with the machine.

Read, understand and follow all safety instructions and operating procedures. If you do not understand the instructions, or if conditions are not correct for proper operation, DO NOT OPERATE THE MACHINE. Consult your supervisor or other responsible person.

SPECIFICATIONS

Model:	**DSC251**
Voltage	D.C. 18 V
Weight	4.0 kg (8.82 lbs)
Dimensions (L x W x H)	471 mm x 137 mm x 139 mm / 18-17/32″ x 5-25/64″ x 5-15/32″ (excluding a handle)
Cutting Capacity of a rebar (620 N/mm^2 / 90,000 psi)	φ10 to φ25 mm (SD490) 3/8″ to 1″ (Grade 60)
No load speed	2200 min^{-1}
External Diameter of Blade	110 mm / 4.3″
Battery cartridge	BL1830B / BL1840B / BL1850B / BL1860B
Charger	DC18RC / DC18RD / DC18RE / DC18SE / DC18SF / DC18SD

- Specifications and design may be subject to change without prior notice.
- Specifications and battery cartridge may differ from country to country.
- The weight may differ depending on the attachment(s), including the battery cartridge. The lightest and heaviest combination, according to EPTA-Procedure 01/2014, are shown in the table.

⚠ WARNING

Read and understand this instruction manual before operating this machine. Failure to follow operating instructions could result in death or serious injury.

Wear safety glasses.

⚠ WARNING LABELS RELATED TO SAFETY

Flying debris and loud noise hazards. Wear ear and eye protection.

Moving blade. Keep hands clear while machine is operating. Turn power off before servicing.

Symbols

The following show the symbols used for the equipment. Be sure that you understand their meaning before use.

Only for EU countries
Do not dispose of electric equipment or battery pack together with household waste material!
In observance of the European Directives, on Waste Electric and Electronic Equipment and Batteries and Accumulators and Waste Batteries and Accumulators and their implementation in accordance with national laws, electric equipment and batteries and battery pack(s) that have reached the end of their life must be collected separately and returned to an environmentally compatible recycling facility.

SAVE THESE INSTRUCTIONS

Meaning of “caution” and “warning” indications

Caution: Indicates a potentially hazardous situation which, if not avoided, may result in minor or moderate injury. This is also used to alert against unsafe practices associated with events that could lead to personal injury.

Warning: Indicates a potentially hazardous situation which, if not avoided, will result in death or serious injury.

***** Makita shall not be responsible for any incidental damages or personal injuries resulting from negligence of Warnings and Safety Instructions contained in the Instruction Manual.**

Intended use

The tool is intended for cutting rebar.

Noise

The typical A-weighted noise level determined according to EN60745:
Sound pressure level (L_{pA}) : 78 dB(A)
Uncertainty (K) : 3 dB(A)

⚠***WARNING:*** **Wear ear protection.**

Vibration

The vibration total value (tri-axial vector sum) determined according to EN60745:
Work mode: impact tightening of fasteners of the maximum capacity of the tool
Vibration emission (a_h) : 2.5 m/s^2
Uncertainty (K) : 1.5 m/s^2

NOTE: The declared vibration emission value has been measured in accordance with the standard test method and may be used for comparing one tool with another.

NOTE: The declared vibration emission value may also be used in a preliminary assessment of exposure.

⚠***WARNING:*** The vibration emission during actual use of the power tool can differ from the declared emission value depending on the ways in which the tool is used.

⚠***WARNING:*** Be sure to identify safety measures to protect the operator that are based on an estimation of exposure in the actual conditions of use (taking account of all parts of the operating cycle such as the times when the tool is switched off and when it is running idle in addition to the trigger time).

EC Declaration of Conformity

For European countries only
The EC declaration of conformity is included as Annex A to this instruction manual.

IMPORTANT SAFETY INSTRUCTIONS

- The “important safety instructions” described below should always be followed to reduce the risk of a fire, electric shock, and personal injury.
- Before operating the machine, read and carefully follow these instructions.
- This manual should be retained for future reference.

⚠ WARNING

1. Before use, read this Instruction Manual thoroughly.

2. Use only the charger and battery specified in this Instruction Manual.

· Any combination, except that specified in this manual, may cause injury or damage due to explosion.

3. Charge properly.

· Use this charger only with the rated AC power supply. Do not use booster transformers or vehicle generator, or use the charger to supply DC power. Incorrect use may cause overheating and fire.

· Do not charge the battery at a temperature under 10°C (50°F) or more than 40°C (104°F) as this may cause an explosion or fire.

4. **Do not short-circuit the pins of the battery. Avoid storing battery in a container with other metal objects such as nails, coins, etc. This may cause overheating, fire and explosion due to short-circuit.**

5. Guard against an electric shock.

· Do not touch the power plug with a wet or damp hands as this may result in an electric shock.

6. Consider the work area environment.

· Do not expose the charger and battery to rain or use them in damp or wet locations, as this may cause overheating or electric shock.

· Keep the work area well lighted. Working where there is insufficient light may cause an accident.

· Do not use or charge the battery where there are flammable fluids or gases, as this may cause explosion or fire.

7. Wear Safety Glasses and Protective Clothing

· Always wear eye protection, dust mask, non-skid safety shoes, helmet and any other mandated or necessary protective clothing while using this equipment. Failure to do so may result in injury.

8. Prevent unintentional starting.

· Ensure the switch is in the off-position before connecting to power source and/or battery pack, picking up or carrying the tool. Carrying power tools with your finger on the switch invites accidents.

9. Secure the work.

· Use clamps or a vice to hold the work. This frees both hands to properly hold, control, and operate the tool. Failure to properly secure the work may result in injury.

10. Disconnect the tools power supply, by removing the Battery and engaging the Trigger Switch Lock, whenever one of the following situations occur.

· The tool is not in use or is being serviced.

· Any parts, such as a blade, are being replaced.

· There is a recognised hazard.

Failure to do so may result in accidental operation and damage or injury.

11. Only use the specified accessories or attachments.

· Use only the accessories or attachments described in this Instruction Manual and the Makita catalog. Use of any other accessories or attachments may result in an accident or injury.

12. Do not expose the battery to fire as it may explode or generate poisonous substances.

13. Under conditions of abuse, liquid may be ejected from the battery; avoid contact.

· If contact accidentally occurs, flush with clear water.

· If liquid contacts eyes, flush with clear water and seek immediate medical help as it may result in loss of eyesight.

14. If operating time has reduced very significantly, stop operating immediately. There is a risk of overheating which may result in burns and even an explosion.

⚠ CAUTION

1. Work area safety

· Keep work area clean and well lit. Cluttered or dark areas invite accidents.

2. Keep Children and bystanders away while operating a power tool. Distractions can cause you to lose control.

3. Store idle power tools correctly.

· Store idle power tools out of the reach of children and do not allow persons unfamiliar with the power tool or these instructions to operate the power tool. Power tools are dangerous in the hands of untrained users.

· Do not store the tool and battery in locations where the temperature may reach or exceed 50°C (122°F), such as a metal box or car in summer.

It may shorten the battery service life or result in smoke and fire.

4. Do not force power tools.

· Use the tool at the proper speed and for which the tool was designed. Cutting too fast may result in damage to the tool or personal injury.

· Do not use the tool in a way that could cause the motor to lock. It may result in smoke or fire.

5. Use the power tool for the right application.

· Use the power tool, its attachments and blades in accordance with these instructions, taking into account the working conditions and the work to be performed. Do not use for a big tool operation. Using for applications that are different from those intended may result in personal injury.

6. Dress properly.

· Do not wear loose clothing or jewellery. Keep your hair, clothing and gloves away from moving parts. Loose clothes, jewelry or long hair can be caught in moving parts.

· Wear rubber gloves and non-skid safety shoes when operating a power tool outdoors. Slippery gloves or shoes may result in a personal injury.

7. Do not abuse a cord of charger.

· Never use the cord for carrying, pulling or unplugging the power tool.

· Keep cord away from heat, oil, sharp edges or moving parts.

· Make sure a cord is located where it will not be stepped on, tripped over, or otherwise subjected to damage or stress. Damaged or entangled cords increase the risk of electric shock or fire.

8. Do not overreach.

· Keep proper footing and balance at all times. This enables better control of the power tool in unexpected situations.

9. Maintain power tools.

· Keep cutting tools sharp and clean. Properly maintained cutting tools with sharp cutting edges are less likely to bind and are easier to control. Damaged blades may cause personal injury.

· Keep handles dry, clean and free from oil and grease. Slippery handles may result in personal injury.

· Check power cord of the charger regularly. Damaged cord will increase risk of electric shock or short circuit resulting in fire.

10. Remove any adjusting key or wrench before turning the power tool on.

· A wrench or key left attached to a rotating part of the power tool may result in personal injury.

11. When charging outdoors, use a cabtyre cable or a cabtyre extension cord.

· Use only the accessories or attachments described in this Instruction Manual and the Makita catalog. Use of any other accessories or attachments may result in an accident or injury.

12. Stay alert, watch what you are doing and use common sense when operating a power tool.

· Do not use a power tool while you are tired or under the influence of drugs, alcohol or medication. A moment of inattention while operating power tools may result in serious personal injury.

13. Check for damaged parts before use.

· Check safety covers and other parts that may affect the tools function for breakage or damage. If damaged, replace or repair before use.

· Check for misalignment or binding of moving parts, breakage of parts and any other condition that may affect the power tool's operation. If damaged, have the power tool repaired before use. Many accidents are caused by poorly maintained power tools.

· Do not use damaged extension cord. If damaged replace it before use. Use of damaged extension cord will increase risk of electric shock or short circuit resulting in fire.

· Do not use the charger if the power cord or power plug is damaged or if it is dropped or it is damaged in any way. A damaged charger will increase risk of electric shock or short circuit resulting in fire.

· Do not use a power tool if the switch doesn't turn it on and off. Any power tool that cannot be controlled with the switch is dangerous and must be repaired.

· Follow instructions for lubricating and changing accessories.

· Disconnect the battery from the power tool before making any adjustment or changing accessories. Such preventive safety measures reduce the risk of starting the power tool accidentally.

14. **Have your power tool serviced by a qualified repair person using only identical replacement parts. This will ensure that the safety of the power tool is maintained.**

- Do not disassemble or modify the battery and charger.
- This power tool is designed in conformity with safety regulations. Do not modify a power tool.
- Have your power tool serviced if it overheats or if any other unusual symptoms are observed.
- Do not permit an unqualified person to repair the tool as this may compromise the tool safety and result in accident and personal injury.

15. **Do not operate power tools in explosive atmospheres, such as in the presence of flammable liquids, gases or dust.** Power tools create sparks which may ignite the dust or fumes.

Electrical Safety

1. **Power tool plugs must match the outlet. Never modify the plug in any way. Do not use any adapter plugs with earthed (grounded) power tools.** Unmodified plugs and matching outlets will reduce risk of electric shock.
2. **Avoid body contact with earthed or grounded surfaces such as pipes, radiators, ranges and refrigerators.** There is an increased risk of electric shock if your body is earthed or grounded.
3. **Do not expose power tools to rain or wet conditions.** Water entering a power tool will increase the risk of electric shock.
4. **Do not abuse the cord. Never use the cord for carrying, pulling or unplugging the power tool. Keep cord away from heat, oil, sharp edges or moving parts.** Damaged or entangled cords increase the risk of electric shock.
5. **When operating a power tool outdoors, use an extension cord suitable for outdoor use.** Use of a cord suitable for outdoor use reduces the risk of electric shock.
6. **If operating a power tool in a damp location is unavoidable, use a residual current device (RCD) protected supply.** Use of an RCD reduces the risk of electric shock.

Personal Safety

1. **Use personal protective equipment. Always wear eye protection.** Protective equipment such as dust mask, non-skid safety shoes, hard hat, or hearing protection used for appropriate conditions will reduce personal injuries.
2. **If devices are provided for the connection of dust extraction and collection facilities, ensure these are connected and properly used.** Use of dust collection can reduce dust-related hazards.
3. **Always wear protective goggles to protect your eyes from injury when using power tools. The goggles must comply with ANSI Z87.1 in the USA, EN 166 in Europe, or AS/NZS 1336 in Australia/New Zealand. In Australia/New Zealand, it is legally required to wear a face shield to protect your face, too.**

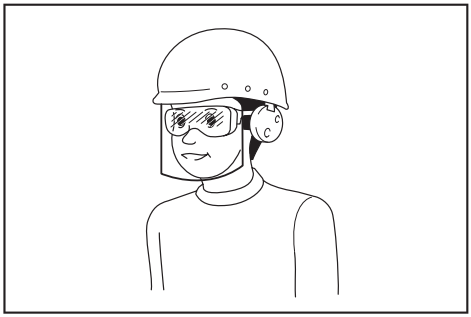

It is an employer's responsibility to enforce the use of appropriate safety protective equipments by the tool operators and by other persons in the immediate working area.

Power tool use and care

1. **Do not force the power tool. Use the correct power tool for your application.** The correct power tool will do the job better and safer at the rate for which it was designed.
2. **Do not use the power tool if the switch does not turn it on and off.** Any power tool that cannot be controlled with the switch is dangerous and must be repaired.
3. **Disconnect the plug from the power source and/or the battery pack from the power tool before making any adjustments, changing accessories, or storing power tools.** Such preventive safety measures reduce the risk of starting the power tool accidentally.
4. **Use the power tool, accessories and tool bits etc. in accordance with these instructions, taking into account the working conditions and the work to be performed.** Use of the power tool for operations different from those intended could result in a hazardous situation.

Battery tool use and care

1. **Recharge only with the charger specified by the manufacturer.** A charger that is suitable for one type of battery pack may create a risk of fire when used with another battery pack.
2. **Use power tools only with specifically designated battery packs.** Use of any other battery packs may create a risk of injury and fire.
3. **When battery pack is not in use, keep it away from other metal objects, like paper clips, coins, keys, nails, screws or other small metal objects, that can make a connection from one terminal to another.** Shorting the battery terminals together may cause burns or a fire.

4. **Under abusive conditions, liquid may be ejected from the battery; avoid contact. If contact accidentally occurs, flush with water. If liquid contacts eyes, additionally seek medical help.** Liquid ejected from the battery may cause irritation or burns.

⚠ CAUTION

1. **Hold the tool securely while it is in use.**
· If the tool is not held securely, you may be injured.
2. **Keep your hands and face away from the moving parts.**
· They may cause an injury.
3. **Release the Switch immediately to stop operation when the tool is out of order or makes an abnormal sound during use.**
Have it inspected and repaired by an authorized service center.
· Failure to do so may result in damage or injury.
4. **If you drop or strike the tool, check carefully that the body is not damaged, cracked, or deformed.**
· Any such damage could cause injury.
5. **Do not short the battery. A battery short can cause a large current flow, overheating, possible burns and even a breakdown.**
· Do not touch the terminals with any conductive materials.
· Avoid storing battery in a container with other metal objects such as nails, coins, etc.
· Do not expose battery to water or rain.
· Do not cut the cord.
6. Do not operate the tool or charge the battery in explosive atmospheres, such as in the presence of lacquer, paint, benzin, thinner, gasoline, gasses or adhesive. This may cause an explosion or fire.
7. Do not charge the battery on paper, cardboard, cloth, cushions, mats, carpets, vinyl or in the presence of dust. This may cause fire.
8. Do not expose the Charger to water or metal items that can short out the charging terminals.
9. Do not use charger for any other purpose than charging the battery.
10. Make sure tipped saw blades have no chips or cracks before using the tool.
11. Do not use water or cutting oil when cutting.
12. Use only Makita genuine tipped saw.
13. Do not leave the tool on the floor with switch locked on. The tool will run continuously and it may cause personal injury.
14. Do not operate the tool close to flammable and fragile items or personnel not necessary to the operation. During cutting hot debris and sparks will be ejected from the tool which may cause damage to the surroundings, fire or personal injury.
15. Do not cut concrete. It causes damage to the tool and may result in personal injury.
16. Check for the presence of people on the ground during operation in an elevated place. Any materials or tools dropped may cause an accident.
17. If during charging, there is an abnormal generation of heat, stop charging immediately by disconnecting the battery. Continuing charging may cause smoke, fire or explosion.
18. Do not allow anything to cover or clog the motor vents.
This may cause the motor to overheat.
19. When using an extension cord with the charger, it is recommended to use a cord with the cross section below and with a length as short as possible. For charging outdoors, use a cord rated for outdoor use.

Relation between usable cord thickness and maximum length

Cord size (Nominal cross sectional area of conductor)	Maximum cord length
0.75 mm^2	20 m
1.25 mm^2	30 m

WARNING FOR USING TIPPED SAW

Work area safety

1. Ensure the Dust Bag is fixed correctly. Without the Dust Bag, when Tipped Saw Blades are damaged, pieces of the blades fly off and can cause serious personal injury.
2. Keep bystanders away from operations. Even with the Dust Bag fitted, damaged blades or hot debris can fly out of the bag, resulting in serious personal injury.
3. Sparking may occur when cutting with Tipped Saw Blades. Do not use the tool where there is the risk of fire or explosion.
4. Cutting with Tipped Saw Blades is noisy. Consider the work area environment.

Dress and protective equipment

5. Wear protective equipment; safety glasses, safety shoes, dust mask and helmet. Even with the Dust Bag fitted, damaged blades or hot debris can fly out of the cover, resulting in personal injury.
6. Dress properly. Do not wear a tie, loose clothing or knit gloves. Keep hair covered with a hair cover or a cap to be away from rotating blades.

Before use

7. Ensure that Tipped Saw Blades are not deformed, chipped, cracked or worn-out. Do not use a Tipped Saw if any damage or wear is found. Cutting under such conditions may cause further damage to the blades and serious personal injury.
8. Do not use the Tipped Saw for any application other than that stated in the tool specification. Using the Tipped Saw for other applications can cause excessive wear, detachment of blades, low cutting performance and abnormal generation of heat, resulting in damage to the blades and serious personal injury.

Tipped saw replacement

9. When replacing the Tipped Saw, ensure that the battery is removed from the tool to prevent accidental operation and personal injury.
10. Ensure there is no one in the surroundings before operation and no abnormal sounds or abnormal vibrations occur when operating. Operating with abnormal sounds or abnormal vibrations can damage the blades resulting in serious personal injury.

During operation

11. Do not use the Tipped Saw for any purpose other than cutting. Do not subject the blades to damage or stress. It can break the blades resulting in serious personal injury.
12. Hold the material firmly, in a vice or similar, so that it cannot move when cutting. If the material moves, the operation becomes unstable and cannot be controlled, resulting in damage to the blades and possible serious personal injury.
13. Start cutting only after the Tipped Saw has reached maximum speed. If the Tipped Saw is set against the material before the motor is started, the blades will be overloaded and damaged, resulting in possible serious personal injury.
14. Do not cut in zigzags, curves, diagonals, or use the side of the blade to prise or for any other purpose.
15. If during cutting, there is an abnormal sound, abnormal vibration, or if the cutting parts are badly worn, stop operation.

    Continuing the operation under such conditions will damage the Tipped Saw blades with the result that chips may be ejected causing serious personal injury.
16. Continuous operation makes the Tipped Saw blades hot and reduces the cutting performances.

Maintenance

17. If there is deformation, a crack or damage on the Tipped Saw, stop the operation. Continuing the operation under such conditions will further damage the Tipped Saw which may break up. Ejected broken parts can cause serious personal injury.
18. Only keep and use Tipped Saws that are in good condition and the blades sharp and clean.

WARNING: **Always wear protective equipment; safety glasses, safety shoes, dust mask and helmet.**

WARNING: **Use only Makita supplied Tipped Saw. Using non Makita parts may damage the tool and can result in serious accident or injury.**

Important safety instructions for battery cartridge

1. **Before using battery cartridge, read all instructions and cautionary markings on (1) battery charger, (2) battery, and (3) product using battery.**
2. **Do not disassemble battery cartridge.**
3. **If operating time has become excessively shorter, stop operating immediately. It may result in a risk of overheating, possible burns and even an explosion.**
4. **If electrolyte gets into your eyes, rinse them out with clear water and seek medical attention right away. It may result in loss of your eyesight.**
5. **Do not short the battery cartridge:**
   (1) **Do not touch the terminals with any conductive material.**
   (2) **Avoid storing battery cartridge in a container with other metal objects such as nails, coins, etc.**
   (3) **Do not expose battery cartridge to water or rain.**

   A battery short can cause a large current flow, overheating, possible burns and even a breakdown.
6. **Do not store the tool and battery cartridge in locations where the temperature may reach or exceed 50 °C (122 °F).**
7. **Do not incinerate the battery cartridge even if it is severely damaged or is completely worn out. The battery cartridge can explode in a fire.**
8. **Be careful not to drop or strike battery.**
9. **Do not use a damaged battery.**
10. **The contained lithium-ion batteries are subject to the Dangerous Goods Legislation requirements.**

    For commercial transports e.g. by third parties, forwarding agents, special requirement on packaging and labeling must be observed.

    For preparation of the item being shipped, consulting an expert for hazardous material is required.

    Please also observe possibly more detailed national regulations.

    Tape or mask off open contacts and pack up the battery in such a manner that it cannot move around in the packaging.
11. **Follow your local regulations relating to disposal of battery.**

SAVE THESE INSTRUCTIONS.

CAUTION: **Only use genuine Makita batteries.** Use of non-genuine Makita batteries, or batteries that have been altered, may result in the battery bursting causing fires, personal injury and damage. It will also void the Makita warranty for the Makita tool and charger.

Tips for maintaining maximum battery life

1. **Charge the battery cartridge before completely discharged. Always stop tool operation and charge the battery cartridge when you notice less tool power.**
2. **Never recharge a fully charged battery cartridge. Overcharging shortens the battery service life.**

3. **Charge the battery cartridge with room temperature at 10 °C - 40 °C (50 °F - 104 °F). Let a hot battery cartridge cool down before charging it.**
4. **Charge the battery cartridge if you do not use it for a long period (more than six months).**

PART NAMES

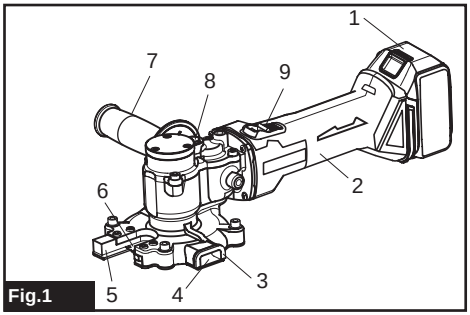

Fig.1

► **Fig.1:** **1.** Battery **2.** Motor **3.** Dust Bag Holder **4.** Outlet **5.** Guide **6.** Tipped Saw **7.** Handle **8.** Lock Button **9.** Switch

Installing or removing battery cartridge

⚠*CAUTION:* Always be sure that the tool is switched off and the battery cartridge is removed before adjusting or checking function on the tool.

⚠*CAUTION:* Always switch off the tool before installing or removing of the battery cartridge.

⚠*CAUTION:* Hold the tool and the battery cartridge firmly when installing or removing battery cartridge. Failure to hold the tool and the battery cartridge firmly may cause them to slip off your hands and result in damage to the tool and battery cartridge and a personal injury.

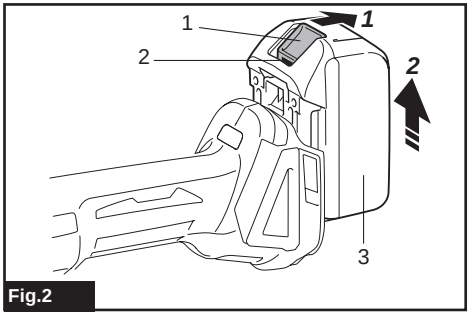

Fig.2

► **Fig.2:** **1.** Button **2.** Red indicator **3.** Battery cartridge

To remove the battery cartridge, slide it from the tool while sliding the button on the front of the cartridge.

To install the battery cartridge, align the tongue on the battery cartridge with the groove in the housing and slip it into place. Insert it all the way until it locks in place with a little click. If you can see the red indicator on the upper side of the button, it is not locked completely.

⚠*CAUTION:* Always install the battery cartridge fully until the red indicator cannot be seen. If not, it may accidentally fall out of the tool, causing injury to you or someone around you.

⚠*CAUTION:* Do not install the battery cartridge forcibly. If the cartridge does not slide in easily, it is not being inserted correctly.

Battery protection system (Lithium-ion battery with star marking)

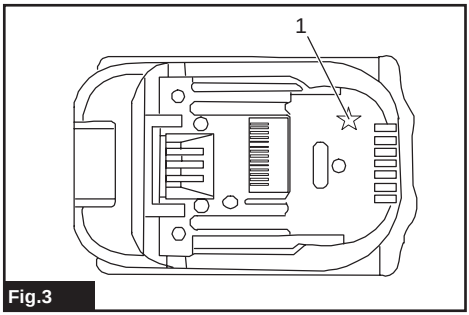

Fig.3

► **Fig.3:** **1.** Star marking

Lithium-ion batteries with a star marking are equipped with a protection system. This system automatically cuts off power to the tool to extend battery life. The tool will automatically stop during operation if the tool and/or battery are placed under one of the following conditions:

Overloaded:
The tool is operated in a manner that causes it to draw an abnormally high current. In this situation, release the trigger switch on the tool and stop the application that caused the tool to become overloaded. Then pull the trigger switch again to restart. If the tool does not start, the battery is overheated. In this situation, let the battery cool before pulling the trigger switch again.

Low battery voltage:
The remaining battery capacity is too low and the tool will not operate. In this situation, remove and recharge the battery.

Indicating the remaining battery capacity

Only for battery cartridges with the indicator

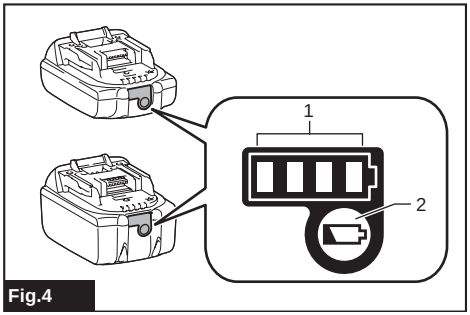

Fig.4

► **Fig.4: 1.** Indicator lamps **2.** Check button

Press the check button on the battery cartridge to indicate the remaining battery capacity. The indicator lamps light up for a few seconds.

Indicator lamps			Remaining capacity
Lighted	Off	Blinking	
■	□	◪	
■ ■ ■ ■			75% to 100%
■ ■ ■ □			50% to 75%
■ ■ □ □			25% to 50%
■ □ □ □			0% to 25%
◪ □ □ □			Charge the battery.
■ ■ □ □ ↑ ↓ □ □ ■ ■			The battery may have malfunctioned.

NOTE: Depending on the conditions of use and the ambient temperature, the indication may differ slightly from the actual capacity.

OPERATING PROCEDURE

⚠*WARNING:* Before the battery is inserted into the tool, ensure that the Switch is at the "O" position and the Switch is off.

⚠*CAUTION:* Push the Lock Button and ensure that the Button comes up when it is released. If the Lock Button will not come up when it is released, the Tipped Saw will be prevented from rotating when the tool is operated resulting in damage to parts and the motor to burn out.

⚠*CAUTION:* Slide the Switch to the "I" position and ensure it stays there and does not move. Then push down on the rear of the Switch to ensure that the Switch moves to the "O" position automatically.

⚠*CAUTION:* Ensure that the bolts retaining the Tipped Saw Cover and all other bolts are tightened firmly.

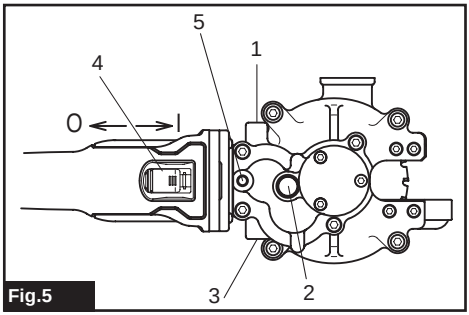

Fig.5

► **Fig.5: 1.** Handle Position (parallel / left side) **2.** Lock Button **3.** Handle Position (parallel / right side) **4.** Switch **5.** Handle Position (vertical / upper side)

Operation

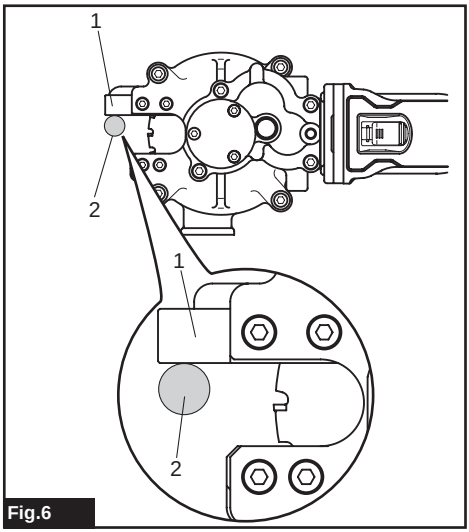

Fig.6

► **Fig.6: 1.** Guide **2.** Rebar

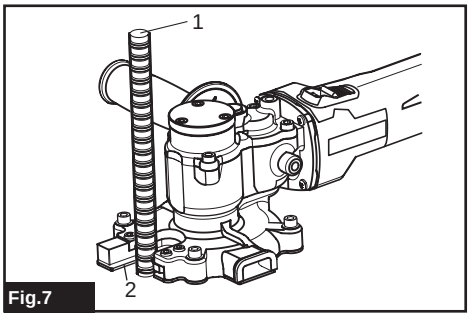

Fig.7

► **Fig.7: 1.** Rebar **2.** Guide

1. Screw the Handle into threaded hole at the vertical or parallel position for easier operation.

2. Ensure that the Switch is at “O” position.

⚠*CAUTION:* As a safety function of this tool, the Motor cannot be energised when the battery is inserted with the Switch at “I” position. For further safety, please note that the battery should be inserted with the Switch at “O” position.

3. Insert the battery into the tool.

4. Slide the Switch to “I” position. The motor is on. Then push down on the forward end of the Switch to lock it for operating continuously.

⚠*WARNING:* Do not touch the rotating parts as they can cause serious injury.

5. Position the Guide in the opening against the rebar.

Then push the tool forward slowly to start to cut the rebar.

⚠*CAUTION:* When cutting, both at the beginning and near the end, slow down the tool’s forward (cutting) movement. A fast cutting action, at these times, will damage the Tipped Saw blades and can cause injury from flying debris.

⚠*CAUTION:* Hold the tool firmly so that it does not shake when cutting. Cutting with the tool shaking will shorten the life of the Tipped Saw and damage the blades.

⚠*CAUTION:* Position the tool so it is at 90 degrees to rebar to be cut. If the tool is not at 90 degrees to the rebar, it can cause shaking and overload the tool.

⚠*CAUTION:* Do not start cutting immediately after the motor is switched on. Allow the Tipped Saw to reach full speed before beginning to cut.

⚠*CAUTION:* Do not remove the battery when the motor is switched on. Doing so can cause damage to the motor’s electronics.

6. After finishing the cut, push down on the rear end of the Switch which will cause the Switch to move to the “O” position and turn off the motor.

⚠*CAUTION:* This tool is designed to cut rebar. Please contact the manufacturer or your local dealer if you want to cut other materials. Cutting other materials will damage the Tipped Saw blades.

Caution when cutting

1. Ensure that the Tipped Saw blade is well away from the material to be cut before switching on.

2. Slow down the forward (cutting) movement of the tool when approaching the end of the cut. This is especially important when the piece to be cut is less than 50 mm in length. The piece cut off can strike the Tipped Saw blades, damaging them and cause serious injury.

3. When the Tipped Saw blades become blunt or chipped. replace the blade. Continuing to use it in this condition will overload the tool.

4. If the material moves or shakes, when being cut, stop the operation and properly secure the material.

5. Do not hold by hand the material to be cut. Doing so may result in personal injury.

6. Do not cut rebar that in size or hardness exceeds the cutting capacity of the tool.

Replace the Tipped Saw when any of the below occurs

1. Warning Lamp (red) blinks frequently even though the battery is fully charged.

2. The Tipped Saw blades are chipped or worn.

3. The cutting speed is very slow.

4. The surface of the cut piece is discolored by heat.

NOTE: Tipped Saw blades cannot be resharpened.

How to fit the Dust Bag

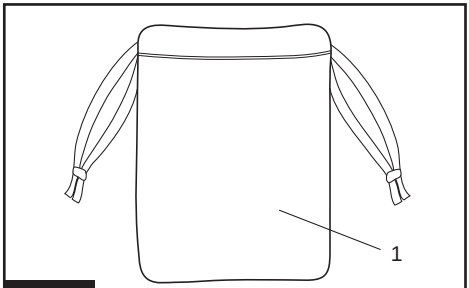

Fig.8

► **Fig.8: 1.** Dust Bag

1. Place the open end of the Dust Bag over the Dust Bag Holder and secure in place with the draw strings.

2. Give the bag a sharp tug to ensure it is properly secured.

⚠*CAUTION:* The Dust Bag is made from non-flammable material but very hot debris, such as that produced when cutting with a worn Tipped Saw blade, can melt the material. Be aware of this possibility when using the Dust Bag.

Battery Indicator function

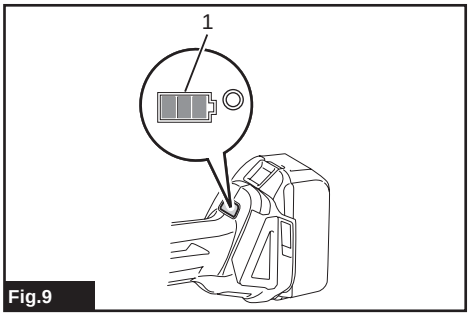

Fig.9

► **Fig.9: 1.** Battery Indicator

When you turn the tool on, the battery indicator shows the remaining battery capacity. (see table 1)

Table 1

Battery indicator status :On :Off :Blinking	Remaining battery capacity
	50 %-100 %
	20 %-50 %
	0 %-20 %
	Charge the battery

Automatic speed change function

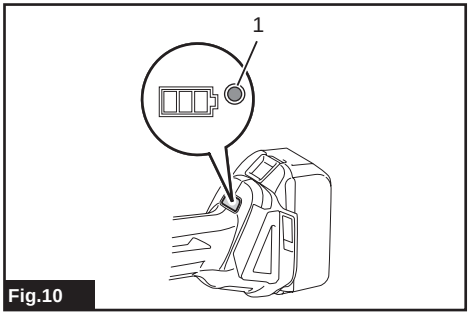

Fig.10

► **Fig.10: 1.** Mode Indicator

The tool has 'high speed mode' and 'high torque mode'. It will select the operating mode automatically, according to the work load. When the mode indicator lights up during operation, the tool is in high torque mode. (see table 2)

Table 2

Mode indicator status	Operation mode
	High speed mode
	High torque mode

Tool / battery protection function

The tool will automatically stop during operation if the tool or battery is placed under one of the following conditions:

- The tool is overloaded
- The tool overheats
- The battery capacity is not enough

If the tool is repeatedly operated under these conditions, the protection system will lock the tool.

Overload protection

If the tool is overloaded during cutting, it will automatically stop. In this situation, turn the tool off and remove the cause of the overload then restart the tool.

Protection lock

When the protection system works repeatedly, the tool will lock and the battery indicator shows the state as table 3.

Table 3

Battery indicator	:On :Off :Blinking
	Protection lock works

Overheat protection for tool

When the tool is overheated, the tool stops automatically and the battery indicator shows the state as table 4.
In this situation, let the tool cool before turning the tool on again.

Table 4

Battery indicator	:On :Off :Blinking
	Tool is overheated

Overdischarge protection

When the battery capacity is not enough, the tool stops automatically. In this case, remove the battery from the tool and charge the battery.

TIPPED SAW REPLACEMENT PROCEDURE

⚠*WARNING:* Switch off the tool and remove the battery before replacing the blade, to prevent accidental operation resulting in serious personal injury.

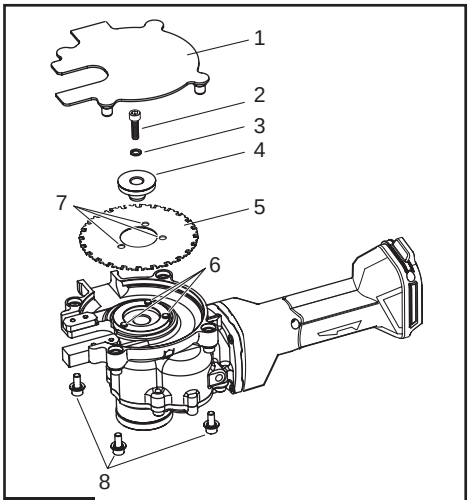

Fig.11

► **Fig.11:** **1.** Tipped Saw Cover **2.** Bolt **3.** Washer **4.** Tipped Saw Guide **5.** Tipped Saw **6.** Pin **7.** Hole **8.** Tipped Saw Cover Retaining Bolt

How to remove the Tipped Saw

Remove the Tipped Saw

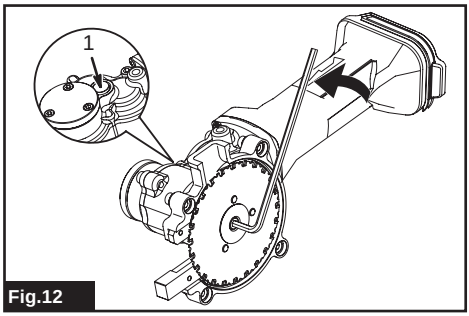

Fig.12

► **Fig.12:** **1.** Push (Lock Button)

1. Remove the Tipped Saw Cover Retaining Bolts (4 pieces) with a hexagonal wrench.

2. Remove the Tipped Saw Cover.

3. Insert a hexagonal wrench into the bolt retaining the Tipped Saw Guide.

4. Push in the Lock Button and using the hexagonal wrench as a handle, rotate the Tipped Saw blade until it is prevented from further rotation by the Lock Button.

⚠*CAUTION:* Ensure that the Lock Button is completely pushed in. If not, the hexagonal wrench can rotate and may cause personal injury.

5. With the Tipped Saw locked, turn the hexagonal wrench counterclockwise to loosen and remove the bolt and washer.

6. Remove the Tipped Saw Guide and the Tipped Saw.

How to replace the Tipped Saw

⚠*CAUTION:* Use only Makita supplied Tipped Saw. If reusing a Tipped Saw, ensure it is not worn, chipped or damaged.

⚠*CAUTION:* Use only a Tipped Saw with three holes which fit the pins on the output shaft of the tool. Other type of saws cannot be used.

⚠*CAUTION:* Install a Tipped Saw in the correct direction. If incorrect, the three pins do not fit the hole properly.

⚠*CAUTION:* Clean and remove all debris and dirt from the Tipped Saw and parts. Debris and dirt can unbalance the Tipped Saw making it wobble during cutting.

Replace the Tipped Saw

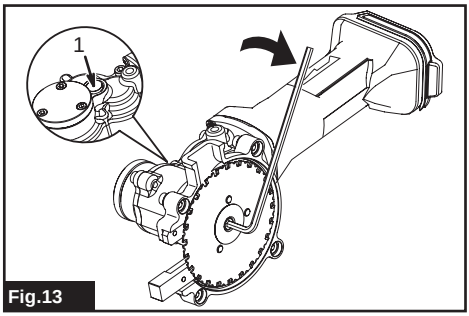

Fig.13

► **Fig.13:** **1.** Push (Lock Button)

1. Fit the Tipped Saw over the Output Shaft. Make sure that the three pins on the Output Shaft fit in the holes on the Tipped Saw.

2. Replace the Tipped Saw Guide.

3. Replace the Bolt and Washer.

4. Push in the Lock Button completely to prevent the Tipped Saw rotating and tighten the Bolt with the hexagonal wrench.

⚠*CAUTION:* Ensure that the Lock Button is completely pushed in. If not, the hexagonal wrench can rotate and may cause personal injury.

5. Replace the Tipped Saw Cover.

6. Tighten the Tipped Saw Cover Retaining Bolts (4 pieces) with a hexagonal wrench.

MAINTENANCE

⚠*CAUTION:* Always ensure that the tool is switched off and the battery is removed before attempting to perform inspection or maintenance.

***NOTICE:* Never use gasoline, benzine, thinner, alcohol or the like. Discoloration, deformation or cracks may result.**

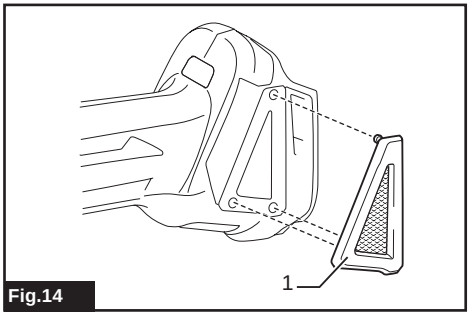

Fig.14

► **Fig.14: 1.** Dust Cover

Remove the Dust Cover from the air vent and clean it for proper air circulation.

⚠*CAUTION:* Clean the Dust Cover when it becomes clogged. Continuing operation with a clogged dust cover may damage the tool.

Makita Europe N.V.
Jan-Baptist Vinkstraat 2,
3070 Kortenberg, Belgium

Makita Corporation
3-11-8, Sumiyoshi-cho,
Anjo, Aichi 446-8502 Japan

DSC251-ENEU-2001
EN
20161019

www.makita.com