ENGLISH: Original instructions

INSTRUCTION MANUAL

Circular Saw

HS7000
HS7600

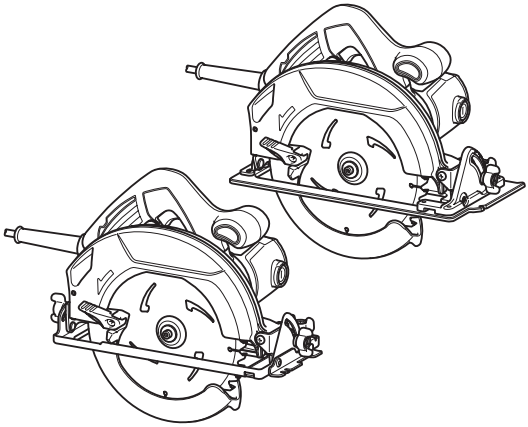

DOUBLE INSULATION

Read before use.

SPECIFICATIONS

Model		HS7000	HS7600
Blade diameter		185 mm	
Max. cutting depth	at 0°	65 mm	64 mm
	at 45°	43 mm	42 mm
No load speed		5,200 min^{-1}	
Overall length		298 mm	309 mm
Net weight		3.8 kg	3.6 kg
Safety class		⧈/II	

- Due to our continuing program of research and development, the specifications herein are subject to change without notice.
- Specifications may differ from country to country.
- Weight according to EPTA-Procedure 01/2014

Symbols

The followings show the symbols which may be used for the equipment. Be sure that you understand their meaning before use.

	Read instruction manual.
	DOUBLE INSULATION
	Only for EU countries Due to the presence of hazardous components in the equipment, used electrical and electronic equipment may have a negative impact on the environment and human health. Do not dispose of electrical and electronic appliances with household waste! In accordance with the European Directive on waste electrical and electronic equipment and its adaptation to national law, used electrical and electronic equipment should be collected separately and delivered to a separate collection point for municipal waste, operating in accordance with the environmental protection regulations. This is indicated by the symbol of the crossed-out wheeled bin placed on the equipment.

Intended use

The tool is intended for performing lengthways and crossways straight cuts and mitre cuts with angles in wood while in firm contact with the workpiece.

Power supply

The tool should be connected only to a power supply of the same voltage as indicated on the nameplate, and can only be operated on single-phase AC supply. They are double-insulated and can, therefore, also be used from sockets without earth wire.

General power tool safety warnings

⚠***WARNING*** **Read all safety warnings, instructions, illustrations and specifications provided with this power tool.** Failure to follow all instructions listed below may result in electric shock, fire and/or serious injury.

Save all warnings and instructions for future reference.

The term "power tool" in the warnings refers to your mains-operated (corded) power tool or battery-operated (cordless) power tool.

Work area safety

1. **Keep work area clean and well lit.** Cluttered or dark areas invite accidents.
2. **Do not operate power tools in explosive atmospheres, such as in the presence of flammable liquids, gases or dust.** Power tools create sparks which may ignite the dust or fumes.
3. **Keep children and bystanders away while operating a power tool.** Distractions can cause you to lose control.

Electrical safety

1. **Power tool plugs must match the outlet. Never modify the plug in any way. Do not use any adapter plugs with earthed (grounded) power tools.** Unmodified plugs and matching outlets will reduce risk of electric shock.
2. **Avoid body contact with earthed or grounded surfaces, such as pipes, radiators, ranges and refrigerators.** There is an increased risk of electric shock if your body is earthed or grounded.
3. **Do not expose power tools to rain or wet conditions.** Water entering a power tool will increase the risk of electric shock.
4. **Do not abuse the cord. Never use the cord for carrying, pulling or unplugging the power tool. Keep cord away from heat, oil, sharp edges or moving parts.** Damaged or entangled cords increase the risk of electric shock.
5. **When operating a power tool outdoors, use an extension cord suitable for outdoor use.** Use of a cord suitable for outdoor use reduces the risk of electric shock.
6. **If operating a power tool in a damp location is unavoidable, use a residual current device (RCD) protected supply.** Use of an RCD reduces the risk of electric shock.
7. **Use of power supply via an RCD with a rated residual current of 30 mA or less is always recommended.**

8. **Power tools can produce electromagnetic fields (EMF) that are not harmful to the user.** However, users of pacemakers and other similar medical devices should contact the maker of their device and/or doctor for advice before operating this power tool.
9. **Do not touch the power plug with wet hands.**
10. **If the cord is damaged, have it replaced by the manufacturer or his agent in order to avoid a safety hazard.**

Personal safety

1. **Stay alert, watch what you are doing and use common sense when operating a power tool. Do not use a power tool while you are tired or under the influence of drugs, alcohol or medication.** A moment of inattention while operating power tools may result in serious personal injury.
2. **Use personal protective equipment. Always wear eye protection.** Protective equipment such as a dust mask, non-skid safety shoes, hard hat or hearing protection used for appropriate conditions will reduce personal injuries.
3. **Prevent unintentional starting. Ensure the switch is in the off-position before connecting to power source and/or battery pack, picking up or carrying the tool.** Carrying power tools with your finger on the switch or energising power tools that have the switch on invites accidents.
4. **Remove any adjusting key or wrench before turning the power tool on.** A wrench or a key left attached to a rotating part of the power tool may result in personal injury.
5. **Do not overreach. Keep proper footing and balance at all times.** This enables better control of the power tool in unexpected situations.
6. **Dress properly. Do not wear loose clothing or jewellery. Keep your hair and clothing away from moving parts.** Loose clothes, jewellery or long hair can be caught in moving parts.
7. **If devices are provided for the connection of dust extraction and collection facilities, ensure these are connected and properly used.** Use of dust collection can reduce dust-related hazards.
8. **Do not let familiarity gained from frequent use of tools allow you to become complacent and ignore tool safety principles.** A careless action can cause severe injury within a fraction of a second.
9. **Always wear protective goggles to protect your eyes from injury when using power tools. The goggles must comply with ANSI Z87.1 in the USA, EN 166 in Europe, or AS/NZS 1336 in Australia/New Zealand. In Australia/New Zealand, it is legally required to wear a face shield to protect your face, too.**

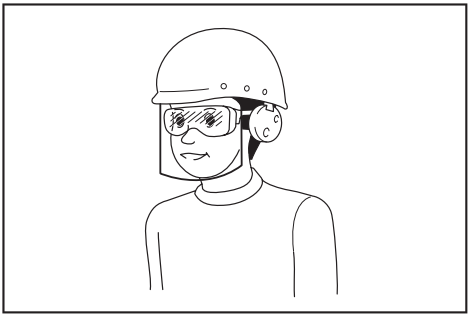

It is an employer's responsibility to enforce the use of appropriate safety protective equipments by the tool operators and by other persons in the immediate working area.

Power tool use and care

1. **Do not force the power tool. Use the correct power tool for your application.** The correct power tool will do the job better and safer at the rate for which it was designed.
2. **Do not use the power tool if the switch does not turn it on and off.** Any power tool that cannot be controlled with the switch is dangerous and must be repaired.
3. **Disconnect the plug from the power source and/or remove the battery pack, if detachable, from the power tool before making any adjustments, changing accessories, or storing power tools.** Such preventive safety measures reduce the risk of starting the power tool accidentally.
4. **Store idle power tools out of the reach of children and do not allow persons unfamiliar with the power tool or these instructions to operate the power tool.** Power tools are dangerous in the hands of untrained users.
5. **Maintain power tools and accessories. Check for misalignment or binding of moving parts, breakage of parts and any other condition that may affect the power tool's operation. If damaged, have the power tool repaired before use.** Many accidents are caused by poorly maintained power tools.
6. **Keep cutting tools sharp and clean.** Properly maintained cutting tools with sharp cutting edges are less likely to bind and are easier to control.
7. **Use the power tool, accessories and tool bits etc. in accordance with these instructions, taking into account the working conditions and the work to be performed.** Use of the power tool for operations different from those intended could result in a hazardous situation.
8. **Keep handles and grasping surfaces dry, clean and free from oil and grease.** Slippery handles and grasping surfaces do not allow for safe handling and control of the tool in unexpected situations.
9. **When using the tool, do not wear cloth work gloves which may be entangled.** The entanglement of cloth work gloves in the moving parts may result in personal injury.

Service

1. **Have your power tool serviced by a qualified repair person using only identical replacement parts.** This will ensure that the safety of the power tool is maintained.
2. **Follow instruction for lubricating and changing accessories.**

Circular saw safety warnings

Cutting procedures

1. **⚠DANGER: Keep hands away from cutting area and the blade. Keep your second hand on auxiliary handle, or motor housing.** If both hands are holding the saw, they cannot be cut by the blade.
2. **Do not reach underneath the workpiece.** The guard cannot protect you from the blade below the workpiece.
3. **Adjust the cutting depth to the thickness of the workpiece.** Less than a full tooth of the blade teeth should be visible below the workpiece.
4. **Never hold the workpiece in your hands or across your leg while cutting. Secure the workpiece to a stable platform.** It is important to support the work properly to minimise body exposure, blade binding, or loss of control.

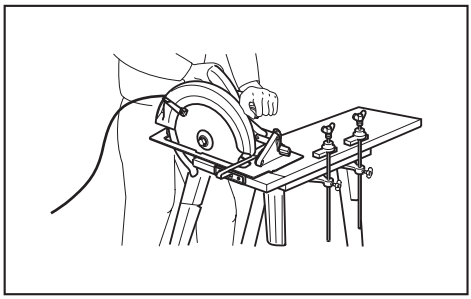

5. **Hold the power tool by insulated gripping surfaces, when performing an operation where the cutting tool may contact hidden wiring or its own cord.** Contact with a "live" wire will also make exposed metal parts of the power tool "live" and could give the operator an electric shock.
6. **When ripping, always use a rip fence or straight edge guide.** This improves the accuracy of cut and reduces the chance of blade binding.
7. **Always use blades with correct size and shape (diamond versus round) of arbour holes.** Blades that do not match the mounting hardware of the saw will run off-centre, causing loss of control.
8. **Never use damaged or incorrect blade washers or bolt.** The blade washers and bolt were specially designed for your saw, for optimum performance and safety of operation.

Kickback causes and related warnings

— kickback is a sudden reaction to a pinched, jammed or misaligned saw blade, causing an uncontrolled saw to lift up and out of the workpiece toward the operator;

— when the blade is pinched or jammed tightly by the kerf closing down, the blade stalls and the motor reaction drives the unit rapidly back toward the operator;

— if the blade becomes twisted or misaligned in the cut, the teeth at the back edge of the blade can dig into the top surface of the wood causing the blade to climb out of the kerf and jump back toward the operator.

Kickback is the result of saw misuse and/or incorrect operating procedures or conditions and can be avoided by taking proper precautions as given below.

1. **Maintain a firm grip with both hands on the saw and position your arms to resist kickback forces. Position your body to either side of the blade, but not in line with the blade.** Kickback could cause the saw to jump backwards, but kickback forces can be controlled by the operator, if proper precautions are taken.
2. **When blade is binding, or when interrupting a cut for any reason, release the trigger and hold the saw motionless in the material until the blade comes to a complete stop. Never attempt to remove the saw from the work or pull the saw backward while the blade is in motion or kickback may occur.** Investigate and take corrective actions to eliminate the cause of blade binding.
3. **When restarting a saw in the workpiece, centre the saw blade in the kerf so that the saw teeth are not engaged into the material.** If a saw blade binds, it may walk up or kickback from the workpiece as the saw is restarted.
4. **Support large panels to minimise the risk of blade pinching and kickback.** Large panels tend to sag under their own weight. Supports must be placed under the panel on both sides, near the line of cut and near the edge of the panel.

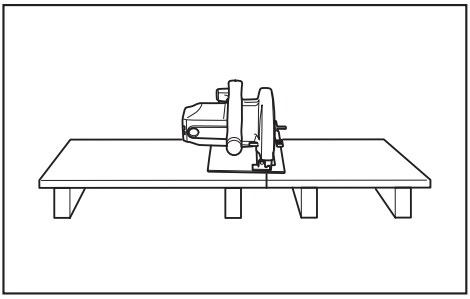

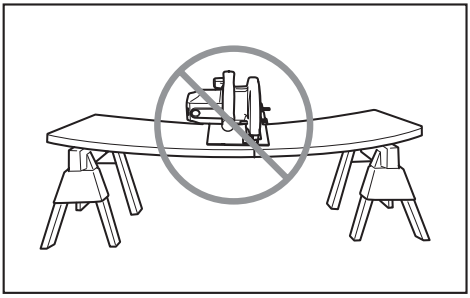

5. **Do not use dull or damaged blades.** Unsharpened or improperly set blades produce narrow kerf causing excessive friction, blade binding and kickback.
6. **Blade depth and bevel adjusting locking levers must be tight and secure before making the cut.** If blade adjustment shifts while cutting, it may cause binding and kickback.
7. **Use extra caution when sawing into existing walls or other blind areas.** The protruding blade may cut objects that can cause kickback.
8. **ALWAYS hold the tool firmly with both hands. NEVER place your hand, leg or any part of your body under the tool base or behind the saw, especially when making cross-cuts.** If kickback occurs, the saw could easily jump backwards over your hand, leading to serious personal injury.

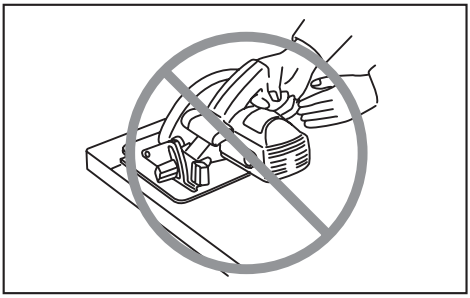

9. **Never force the saw. Push the saw forward at a speed so that the blade cuts without slowing.** Forcing the saw can cause uneven cuts, loss of accuracy, and possible kickback.

Lower guard function

1. **Check the lower guard for proper closing before each use. Do not operate the saw if the lower guard does not move freely and close instantly. Never clamp or tie the lower guard into the open position.** If the saw is accidentally dropped, the lower guard may be bent. Raise the lower guard with the retracting handle and make sure it moves freely and does not touch the blade or any other part, in all angles and depths of cut.
2. **Check the operation of the lower guard spring. If the guard and the spring are not operating properly, they must be serviced before use.** Lower guard may operate sluggishly due to damaged parts, gummy deposits, or a build-up of debris.
3. **The lower guard may be retracted manually only for special cuts such as “plunge cuts” and “compound cuts”. Raise the lower guard by the retracting handle and as soon as the blade enters the material, the lower guard must be released.** For all other sawing, the lower guard should operate automatically.
4. **Always observe that the lower guard is covering the blade before placing the saw down on bench or floor.** An unprotected, coasting blade will cause the saw to walk backwards, cutting whatever is in its path. Be aware of the time it takes for the blade to stop after switch is released.
5. **To check lower guard, open lower guard by hand, then release and watch guard closure. Also check to see that retracting handle does not touch tool housing.** Leaving blade exposed is VERY DANGEROUS and can lead to serious personal injury.

Additional safety warnings

1. **Use extra caution when cutting damp wood, pressure treated lumber, or wood containing knots.** Maintain smooth advancement of tool without decrease in blade speed to avoid overheating the blade tips.
2. **Do not attempt to remove cut material when blade is moving. Wait until blade stops before grasping cut material.** Blades coast after turn off.
3. **Avoid cutting nails. Inspect for and remove all nails from lumber before cutting.**
4. **Place the wider portion of the saw base on that part of the workpiece which is solidly supported, not on the section that will fall off when the cut is made. If the workpiece is short or small, clamp it down. DO NOT TRY TO HOLD SHORT PIECES BY HAND!**

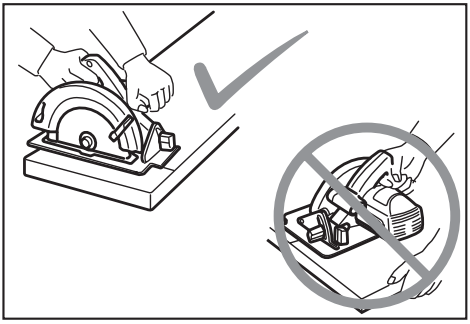

5. **Before setting the tool down after completing a cut, be sure that the guard has closed and the blade has come to a complete stop.**
6. **Never attempt to saw with the circular saw held upside down in a vise. This is extremely dangerous and can lead to serious accidents.**

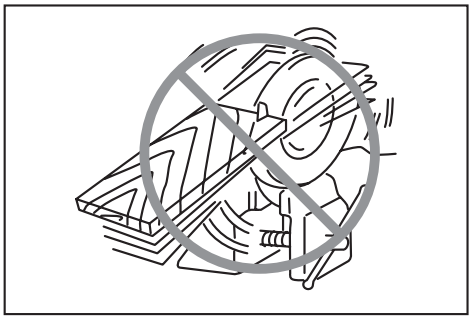

7. **Some material contains chemicals which may be toxic. Take caution to prevent dust inhalation and skin contact. Follow material supplier safety data.**
8. **Do not stop the blades by lateral pressure on the saw blade.**
9. **Do not use any abrasive wheels.**
10. **Only use the saw blade with the diameter that is marked on the tool or specified in the manual.** Use of an incorrectly sized blade may affect the proper guarding of the blade or guard operation which could result in serious personal injury.
11. **Keep blade sharp and clean.** Gum and wood pitch hardened on blades slows saw and increases potential for kickback. Keep blade clean by first removing it from tool, then cleaning it with gum and pitch remover, hot water or kerosene. Never use gasoline.
12. **Wear a dust mask and hearing protection when use the tool.**
13. **Always use the saw blade intended for cutting the material that you are going to cut.**
14. **Only use the saw blades that are marked with a speed equal or higher than the speed marked on the tool.**
15. **(For European countries only)**
    Always use the blade which conforms to EN847-1, if intended for wood and analogous materials.
16. **Place the tool and the parts on a flat and stable surface.** Otherwise the tool or the parts may fall and cause an injury.

SAVE THESE INSTRUCTIONS.

WARNING: **DO NOT let comfort or familiarity with product (gained from repeated use) replace strict adherence to safety rules for the subject product. MISUSE or failure to follow the safety rules stated in this instruction manual may cause serious personal injury.**

FUNCTIONAL DESCRIPTION

CAUTION:
- Always be sure that the tool is switched off and unplugged before adjusting or checking function on the tool.

Adjusting depth of cut

CAUTION:
- After adjusting the depth of cut, always tighten the lever securely.

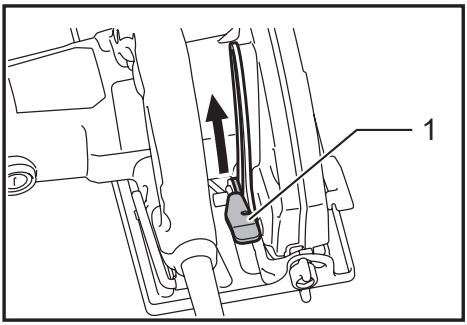

► **1.** Lever

Loosen the lever on the depth guide and move the base up or down. At the desired depth of cut, secure the base by tightening the lever.
For cleaner, safer cuts, set cut depth so that no more than one blade tooth projects below workpiece. Using proper cut depth helps to reduce potential for dangerous KICKBACKS which can cause personal injury.

Bevel cutting

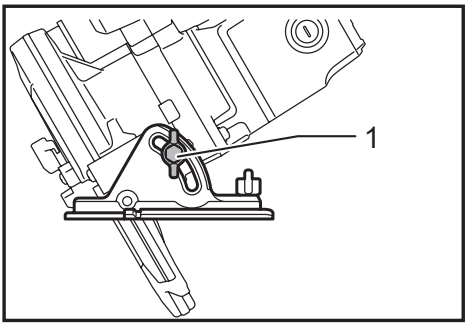

► **1.** Clamping screw

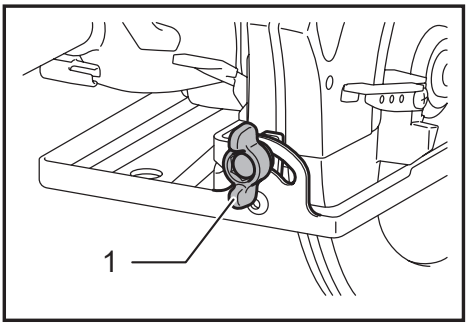

► **1.** Clamping screw

For HS7000

Loosen the front and rear clamping screws. Set for the desired angle (0°-45°) by tilting accordingly, then tighten the front and rear clamping screws securely.

For HS7600

Loosen the clamping screw. Set for the desired angle (0°- 45°) by tilting accordingly, then tighten the clamping screw securely.

Sighting

For HS7000

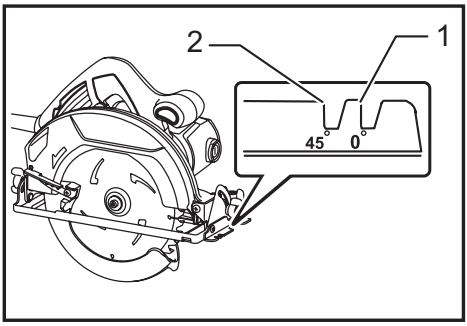

► **1.** Cutting line (0° position) **2.** Cutting line (45° position)

For HS7600

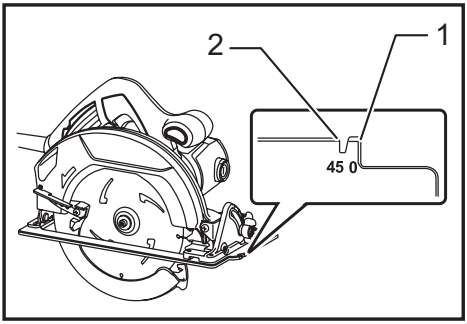

► **1.** Cutting line (0° position) **2.** Cutting line (45° position)

For straight cuts, align the 0° position on the front of the base with your cutting line. For 45° bevel cuts, align the 45° position with it.

Switch action

⚠*CAUTION:*

- Before plugging in the tool, always check to see that the switch trigger actuates properly and returns to the "OFF" position when released.

NOTE: The switch action varies depending on the countries. There are two types of switch actions; lock-off type and lock-on type.

Check your tool's switch action as follows while the tool is unplugged.

— If you can pull the switch trigger only when the button beside the switch trigger is being pressed, your tool employs lock-off type switch.

— If you can pull the switch trigger without pressing the button beside the switch trigger, your tool employs lock-on type switch.

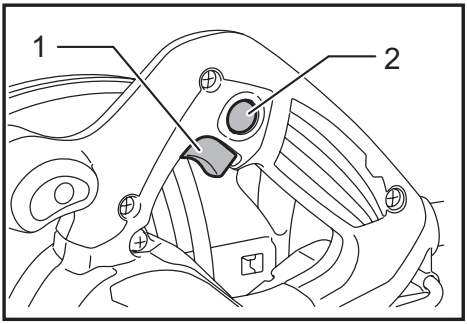

► **1.** Switch trigger **2.** Lock-off button/ Lock button

For tool with lock-off button

⚠*CAUTION:*

- Do not pull the switch trigger hard without pressing in the lock-off button. This can cause switch breakage.

To prevent the switch trigger from being accidentally pulled, a lock-off button is provided.
To start the tool, depress the lock-off button and pull the switch trigger. Release the switch trigger to stop.

⚠WARNING:

- For your safety, this tool is equipped with a lock-off button which prevents the tool from unintended starting. NEVER use the tool if it runs when you simply pull the switch trigger without pressing the lock-off button. Return tool to a Makita service center for proper repairs BEFORE further usage.
- NEVER tape down or defeat purpose and function of lock-off button.

For tool with lock button

⚠CAUTION:

- Switch can be locked in "ON" position for ease of operator comfort during extended use. Apply caution when locking tool in "ON" position and maintain firm grasp on tool.

To start the tool, simply pull the switch trigger. Release the switch trigger to stop.

For continuous operation, pull the switch trigger, push in the lock button and then release the switch trigger.

To stop the tool from the locked position, pull the switch trigger fully, then release it.

ASSEMBLY

⚠CAUTION:

- Always be sure that the tool is switched off and unplugged before adjusting or checking function on the tool.

Removing or installing saw blade

⚠CAUTION:

- Be sure the blade is installed with teeth pointing up at the front of the tool.
- Use only the Makita wrench to install or remove the blade.

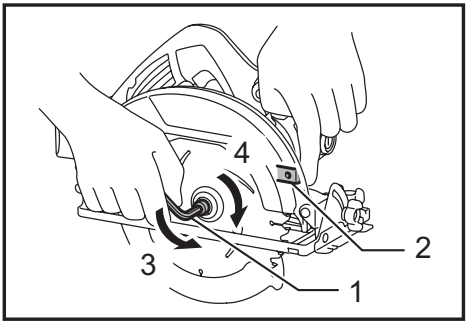

► **1.** Hex wrench **2.** Shaft lock **3.** Loosen **4.** Tighten

To remove the blade, press the shaft lock so that the blade cannot revolve and use the wrench to loosen the hex bolt counterclockwise. Then remove the hex bolt, outer flange and blade.

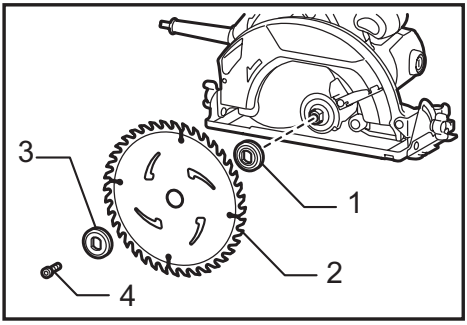

► **1.** Inner flange **2.** Saw blade **3.** Outer flange **4.** Hex bolt

When changing blade, make sure to also clean upper and lower blade guards of accumulated sawdust. Such efforts do not, however, replace the need to check lower guard operation before each use.

For tool with the inner flange for other than 15.88 mm hole-diameter saw blade

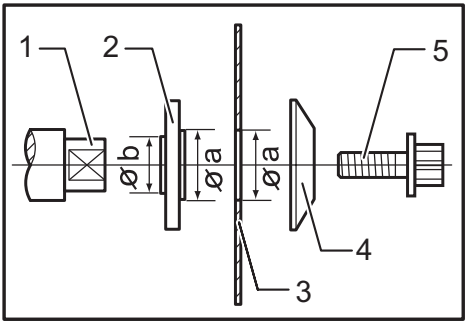

► **1.** Mounting shaft **2.** Inner flange **3.** Saw blade **4.** Outer flange **5.** Hex bolt

The inner flange has a certain diameter protrusion on one side of it and a different diameter protrusion on the other side. Choose a correct side on which protrusion fits into the saw blade hole perfectly.
Next, mount the inner flange onto the mounting shaft so that the correct side of protrusion on the inner flange faces outward and then place saw blade and outer flange.
BE SURE TO TIGHTEN THE HEX BOLT CLOCKWISE SECURELY.

⚠CAUTION:

- **Make sure that the protrusion "a" on the inner flange that is positioned outside fits into the saw blade hole "a" perfectly.** Mounting the blade on the wrong side can result in the dangerous vibration.

For tool with the inner flange for a 15.88 mm hole-diameter saw blade (country specific)

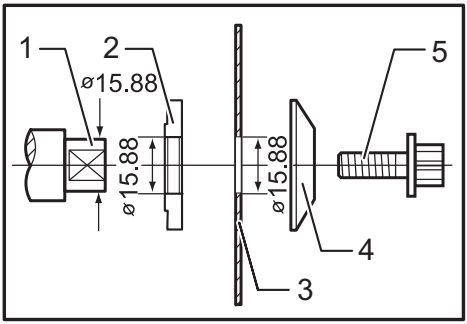

► **1.** Mounting shaft **2.** Inner flange **3.** Saw blade **4.** Outer flange **5.** Hex bolt

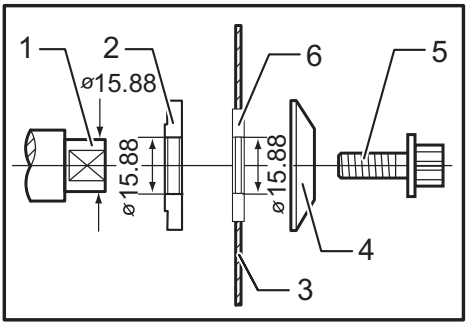

► **1.** Mounting shaft **2.** Inner flange **3.** Saw blade **4.** Outer flange **5.** Hex bolt **6.** Ring

Mount the inner flange with its recessed side facing outward onto the mounting shaft and then place saw blade (with the ring attached if needed), outer flange and hex bolt.
BE SURE TO TIGHTEN THE HEX BOLT CLOCKWISE SECURELY.

> ⚠***WARNING:***
>
> - **Before mounting the blade onto the spindle, always be sure that the correct ring for the blade's arbor hole you intend to use is installed between the inner and the outer flanges.** Use of the incorrect arbor hole ring may result in the improper mounting of the blade causing blade movement and severe vibration resulting in possible loss of control during operation and in serious personal injury.

Hex wrench storage

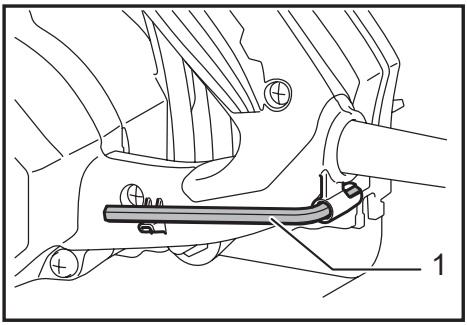

► **1.** Hex wrench

When not in use, store the hex wrench as shown in the figure to keep it from being lost.

Connecting a vacuum cleaner

(Optional accessory in some countries)

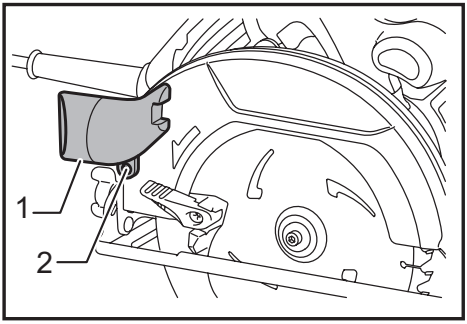

► **1.** Dust nozzle **2.** Screw

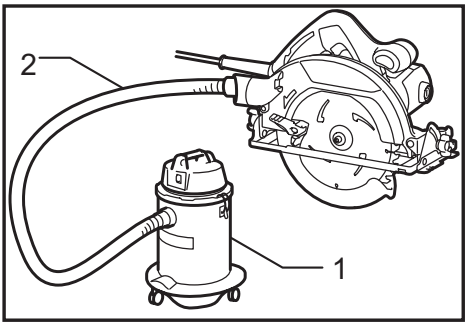

► **1.** Vacuum cleaner **2.** Hose

When you wish to perform clean cutting operation, connect a Makita vacuum cleaner to your tool.
Install the dust nozzle on the tool using the screw. Then connect a hose of the vacuum cleaner to the dust nozzle as shown in the figure.

OPERATION

⚠CAUTION:

- **Wear dust mask when performing cutting operation.**
- Be sure to move the tool forward in a straight line gently. Forcing or twisting the tool will result in overheating the motor and dangerous kick-back, possibly causing severe injury.
- Always use a front grip and rear handle and firmly hold the tool by both front grip and rear handle during operations.

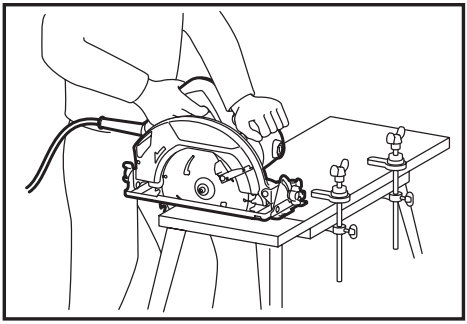

Hold the tool firmly. The tool is provided with both a front grip and rear handle. Use both to best grasp the tool. If both hands are holding saw, they cannot be cut by the blade. Set the base on the workpiece to be cut without the blade making any contact. Then turn the tool on and wait until the blade attains full speed. Now simply move the tool forward over the workpiece surface, keeping it flat and advancing smoothly until the sawing is completed.

To get clean cuts, keep your sawing line straight and your speed of advance uniform. If the cut fails to properly follow your intended cut line, do not attempt to turn or force the tool back to the cut line. Doing so may bind the blade and lead to dangerous kickback and possible serious injury. Release switch, wait for blade to stop and then withdraw tool. Realign tool on new cut line, and start cut again. Attempt to avoid positioning which exposes operator to chips and wood dust being ejected from saw. Use eye protection to help avoid injury.

Rip fence (Guide rule) (optional accessory)

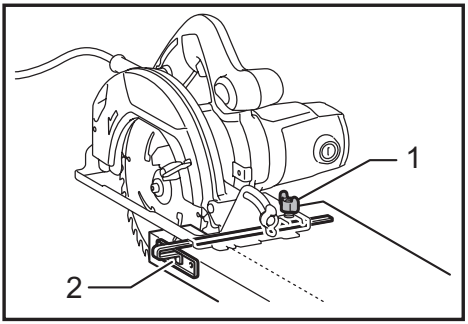

► **1.** Clamping screw **2.** Rip fence (Guide rule)

The handy rip fence allows you to do extra-accurate straight cuts. Simply slide the rip fence up snugly against the side of the workpiece and secure it in position with the clamping screw on the front of the base. It also makes repeated cuts of uniform width possible.

MAINTENANCE

⚠CAUTION:

- Always be sure that the tool is switched off and unplugged before attempting to perform inspection or maintenance.
- **Clean out the upper and lower guards to ensure there is no accumulated sawdust which may impede the operation of the lower guarding system.** A dirty guarding system may limit the proper operation which could result in serious personal injury. The most effective way to accomplish this cleaning is with compressed air. **If the dust is being blown out of the guards be sure the proper eye and breathing protection is used.**
- Never use gasoline, benzine, thinner, alcohol or the like. Discoloration, deformation or cracks may result.

Adjusting for accuracy of 0°cut

For HS7600 only

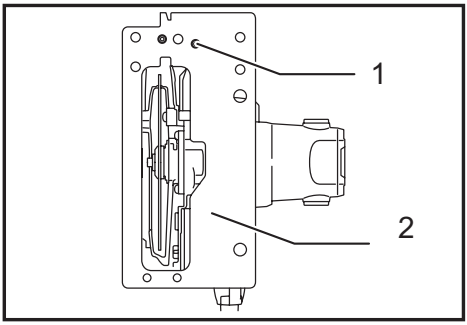

► **1.** Screw **2.** Base

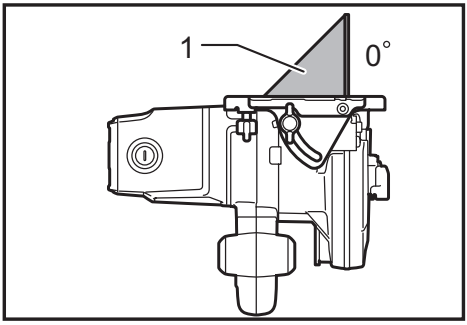

► **1.** Triangular rule

This adjustment has been made at the factory. But if it is off, adjust the adjusting screws with a hex wrench while inspecting 0° the blade with the base using a triangular rule or square rule, etc.

Replacing carbon brushes

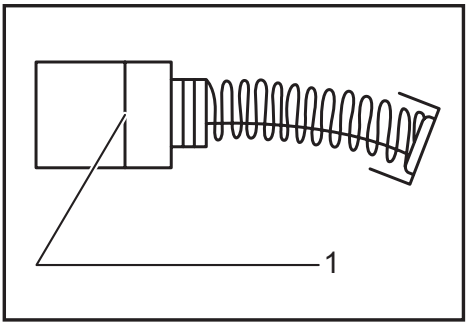

► **1.** Limit mark

Remove and check the carbon brushes regularly. Replace when they wear down to the limit mark. Keep the carbon brushes clean and free to slip in the holders. Both carbon brushes should be replaced at the same time. Use only identical carbon brushes.
Use a screwdriver to remove the brush holder caps.

Take out the worn carbon brushes, insert the new ones and secure the brush holder caps.

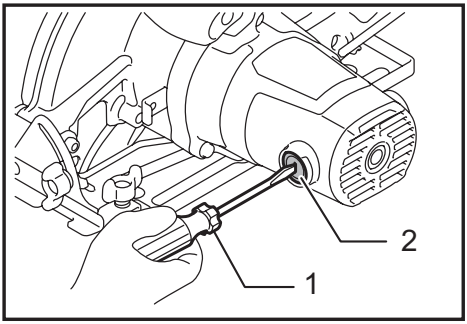

► **1.** Screwdriver **2.** Brush holder cap

To maintain product SAFETY and RELIABILITY, repairs, any other maintenance or adjustment should be performed by Makita Authorized Service Centers, always using Makita replacement parts.

OPTIONAL ACCESSORIES

⚠*CAUTION:*

- These accessories or attachments are recommended for use with your Makita tool specified in this manual. The use of any other accessories or attachments might present a risk of injury to persons. Only use accessory or attachment for its stated purpose.

If you need any assistance for more details regarding these accessories, ask your local Makita Service Center.

- Saw blades
- Rip fence (Guide rule)
- Dust nozzle
- Hex wrench

NOTE:

- Some items in the list may be included in the tool package as standard accessories. They may differ from country to country.

Makita Corporation
3-11-8, Sumiyoshi-cho,
Anjo, Aichi 446-8502 Japan
www.makita.com

885371-927
EN
20240919